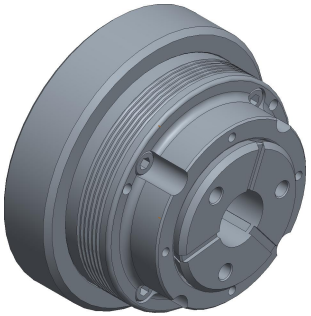

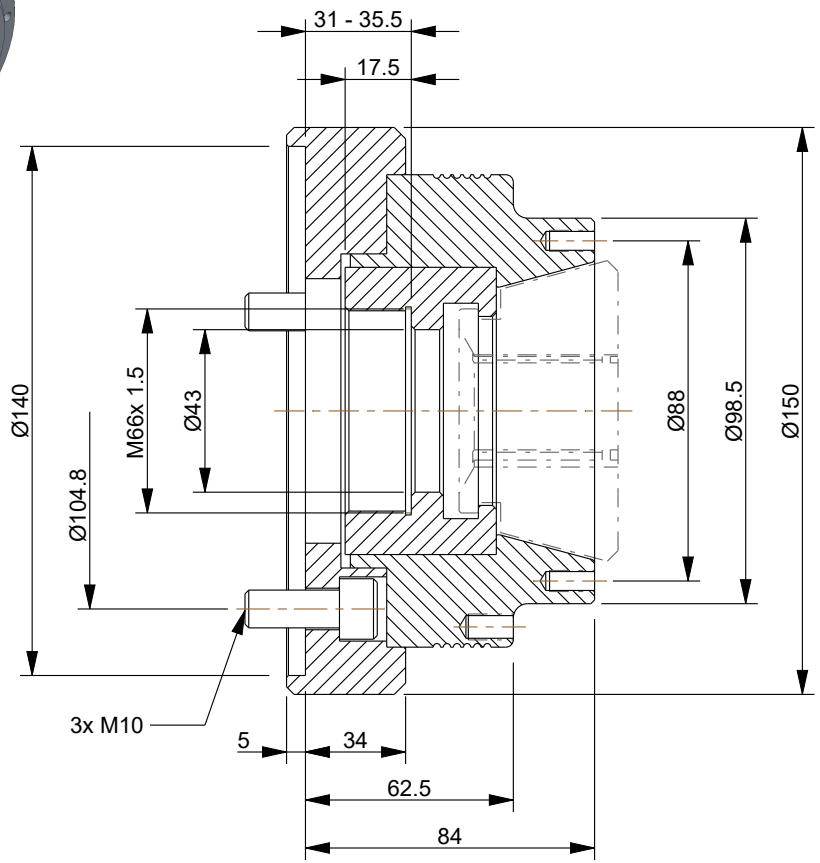

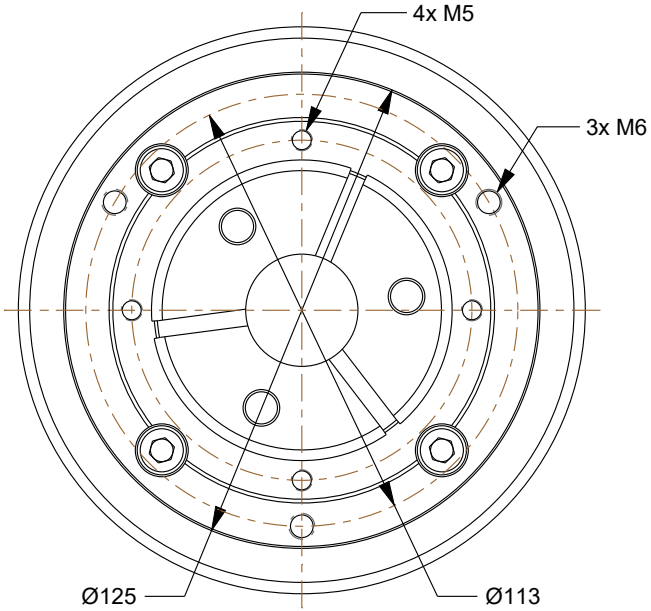

Sr. No.	Specifications	
1	Max. Speed	7000 r.p.m.
2	Max. Axial Force	35 KN
3	Max. Clamping Force	80 KN
4	Recomm. Cylinders	VNK-T2 102-46 Tipo
5	Max. Cylinder Speed	7000 r.p.m.

NOTES:
1. EQUIPMENT: Chuck and fixing screws (collets to be ordered separately).
2. Mass (without collet) - 7.0 Kg.

MARIO PINTO
SMW AUTOBLOK

285 Egidi Drive, Wheeling
IL 60090, USA
Ph: 847-215-0591

This file and any associated information and specifications are provided for reference and evaluation purposes only, and is subject to change without notice. SMW AUTOBLOK makes no representations, warranties or guarantees as to the appropriateness, accuracy, completeness, or suitability for any purpose, of the file, information or specifications. You are solely responsible for the use of the file, information or specifications.

77686942

Pull-to-close collet chucks
for bar machining

SCALE	NTS
UNIT	MM
SHEET	1 of 1